Computer Vision – Mission Accomplished or Punk?

Computer Vision Winter Workshop 2017, Retz

Wilhelm Burger
FH Upper Austria @ Hagenberg

FOREWORD

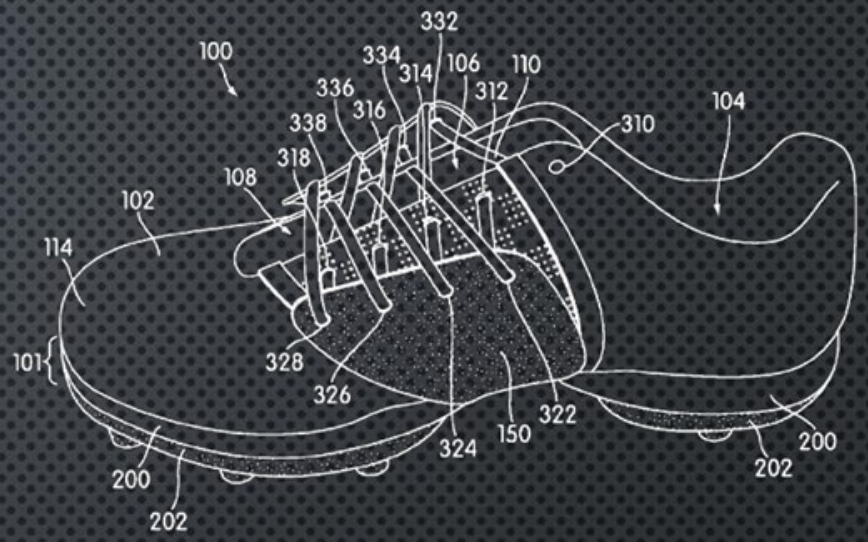

- No technical talk (no pictures, no math)
- Personal background
- Computer vision – love & hate
- Education, research, politics …

COMPUTER VISION TECHNOLOGY

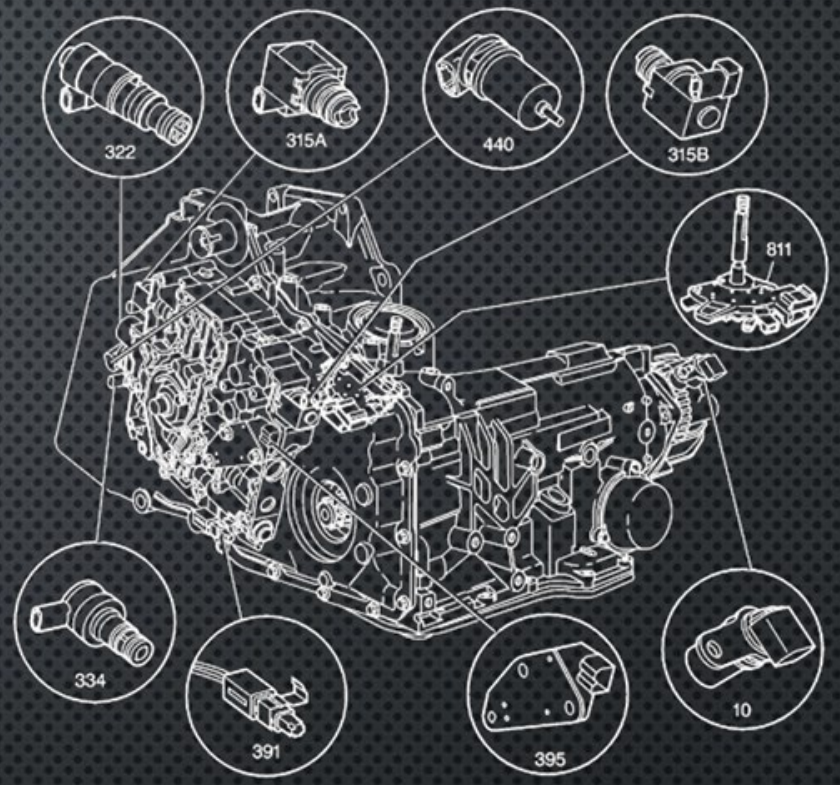

- What makes technologies successful/accepted/fail?
- Evolutionary, disruptive, transient technologies
- Can we go without research in … ?
- Overly ambitious goals have a long history in computing.
- There is no universal problem solver.
- Biomorphic engineering – good examples anywhere?
- Just give is 1000 x more computing power …
- Betting on the wrong horse (i.e., technology)?

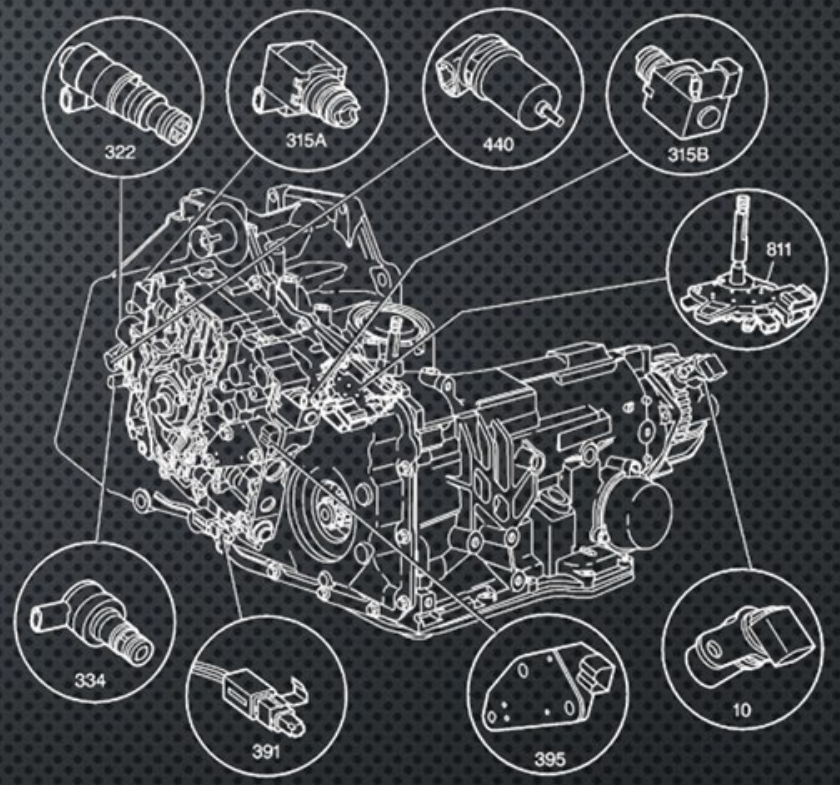

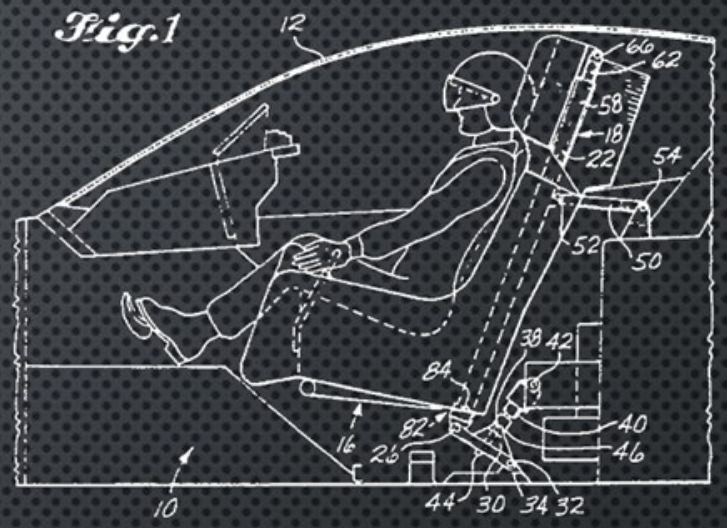

AUTONOMOUS SYSTEMS – THE GREAT CHANCE?

- Flagship application: now or never!
- Industry, governments, public
- New kids on the block
- 30 years of evolutionary research
- Full autonomy – how far away?
- Automatic mechanisms & users: trust and simplicity
- Industry has no plan
- Driving your Mercedes-Benz at 100 (age)
- Mobility in general – where are we going?

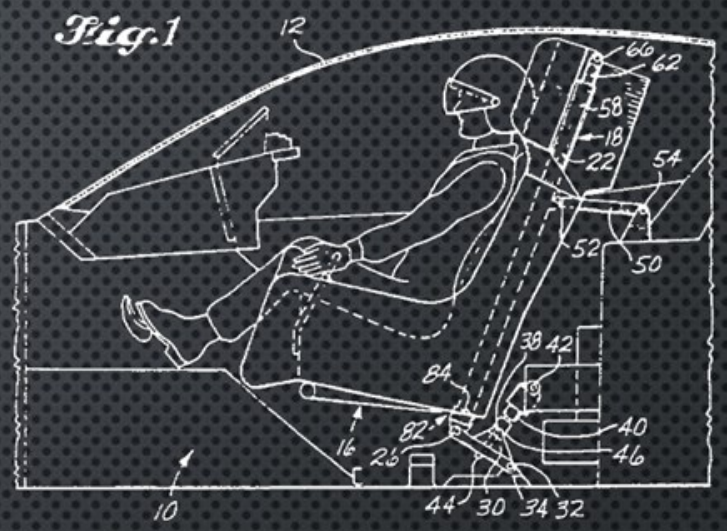

EDUCATION

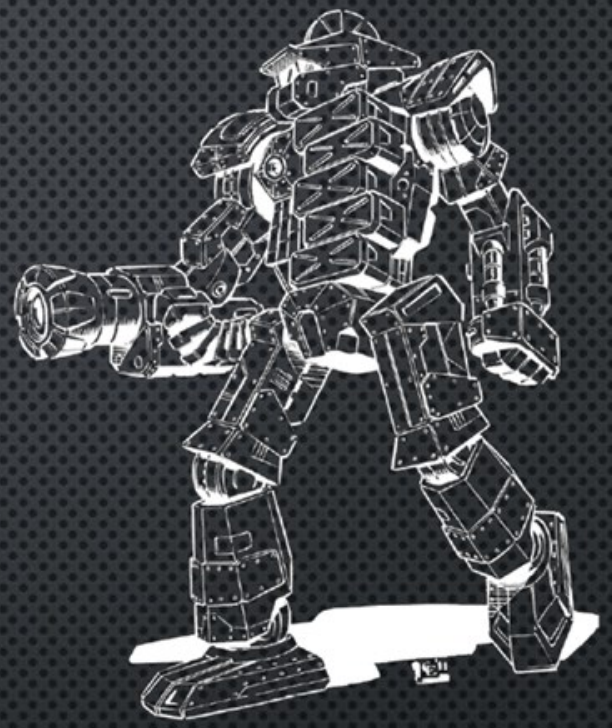

- The Fachhochschule system
- Hagenberg is IT (only)
- Imaging & vision in a media curriculum?
- Projects: topics, expectations, advisorship
- Structure, abstraction, formal description
- Pencil and paper?
- Professional language
- Recognize standard problems
- Part-time studies are a threat
- True talent is rare …

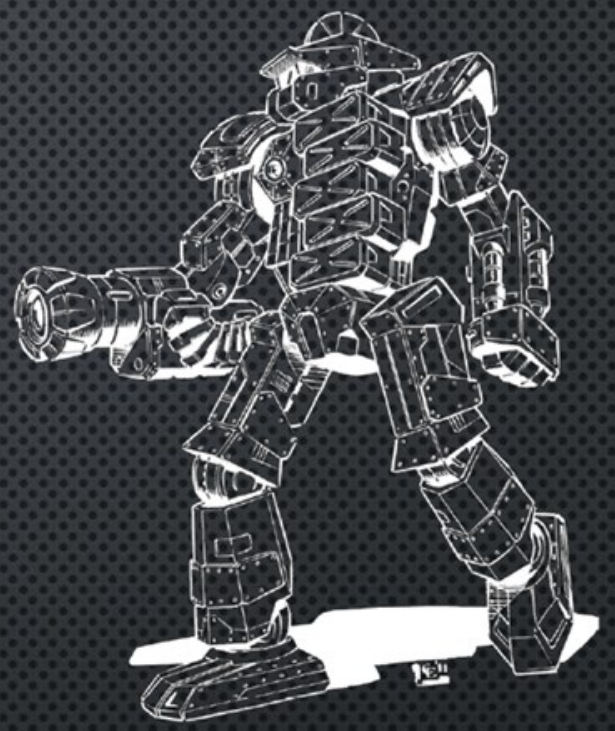

COMPUTER SCIENCE

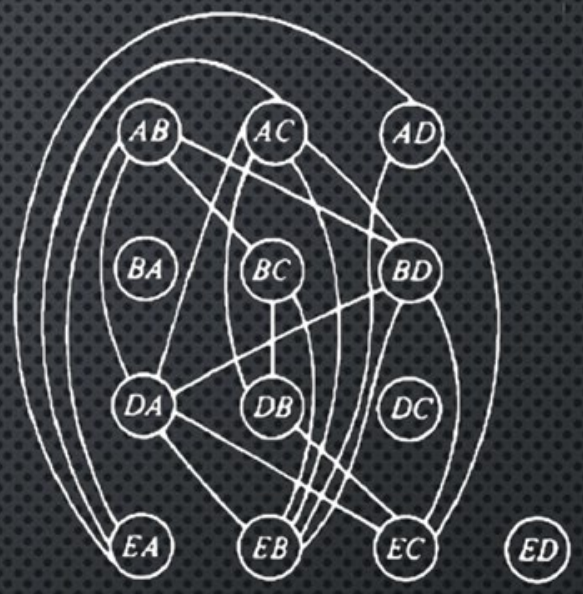

- Most CV people have a computing background – good?
- Programming is a large part of the job.
- Modern paradigms and tools help taming complexity.
- Multilingual background is good
- Similar harware/software infrastructure everywhere – amazing!
- But …

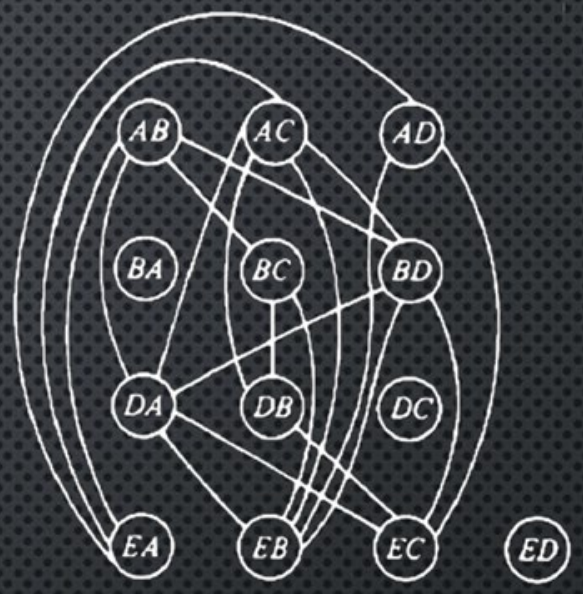

- Too much focused on paradigms?
- Google first, then think …
- Software modules/services: black boxes vs. transparent algorithms
- Numerical/scientific computing?
- Care about efficiency?
- Usability – „experts“ without common sense
- Take it easy! (avoid difficult problems)

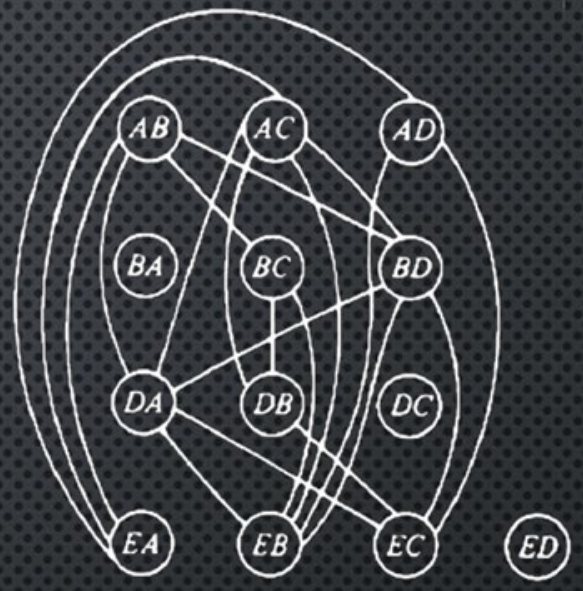

RESEARCH

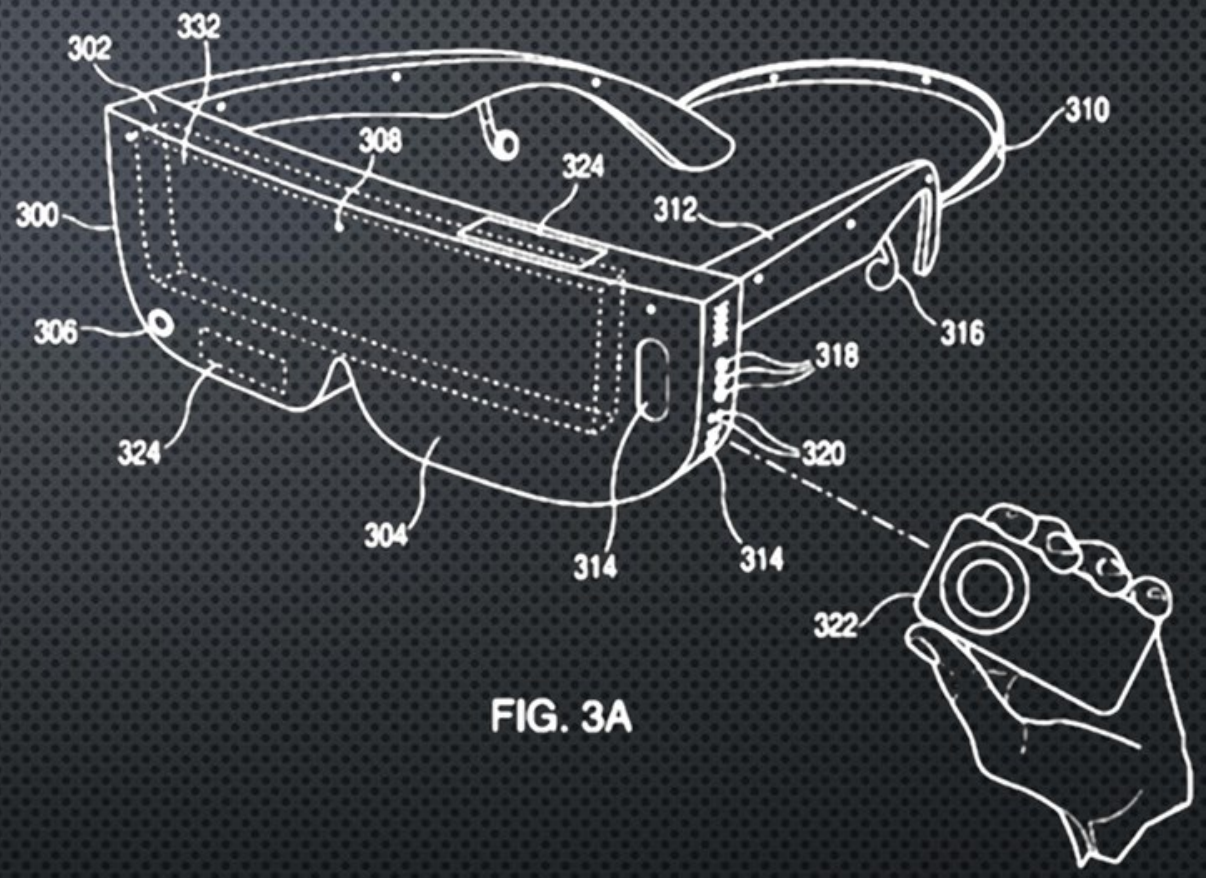

FIG. 3A

- 90% of all research is …….. (fill in)
- Don’t like project management
- Research = academic career pressure
- Quantitative metrics counterproductive?
- Peer system: closed, self-sustained
- Money first – ideas later?
- But: Research is part of the learning process

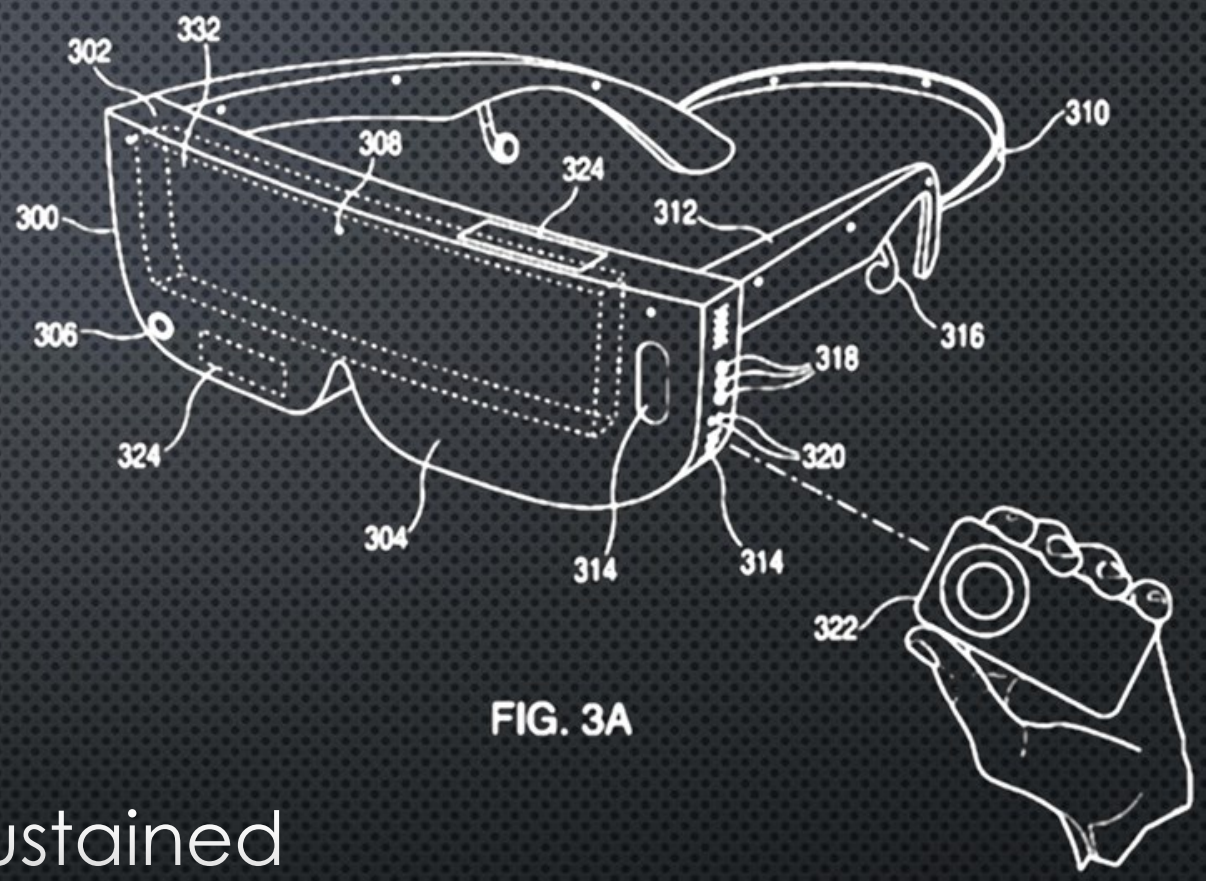

FIG. 3A

- Research is inefficient (no awareness)
- PhD programs adequate?
- “Interdisciplinary” rulez
- Decontextualization growing fast
- Are strategic programs effective?
- Research expertise is too thin/scattered
- Industry/academic expectations don’t match

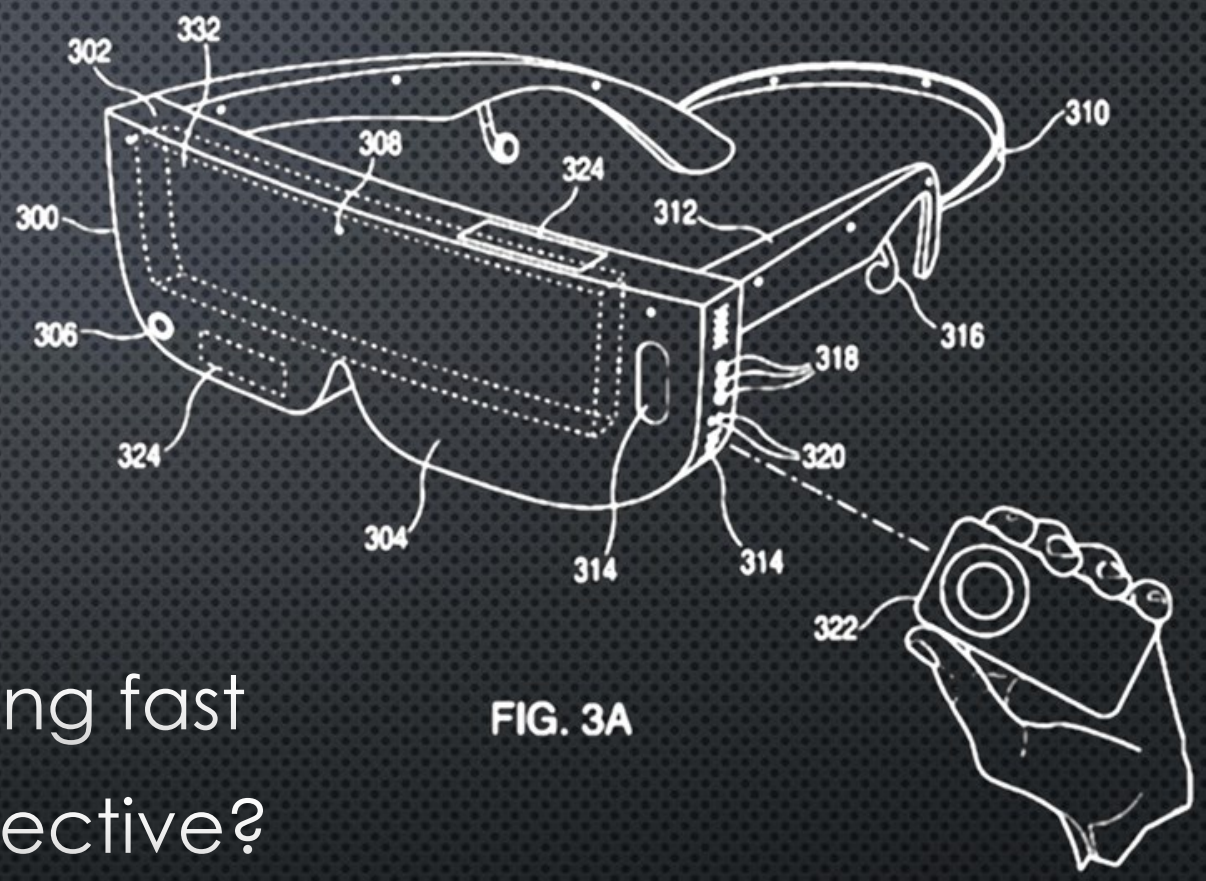

FIG. 3A

Politics, Media & The Public

- Do we understand consumer needs?
- Do people understand what CV is doing, why it is important?
- Impact on student interest, funding decisions, strategic programs …
- Politicians love buzz topics: drones, 3D printing, big data, Industry 4.0, IOT, quantum computing …
- Total „digitization“ panic
- What are our responsibilities as educators and researchers?

I think ...


```
return (missionAccomplished(cv) || isPunk(cv));
```

→ false

Thank You!